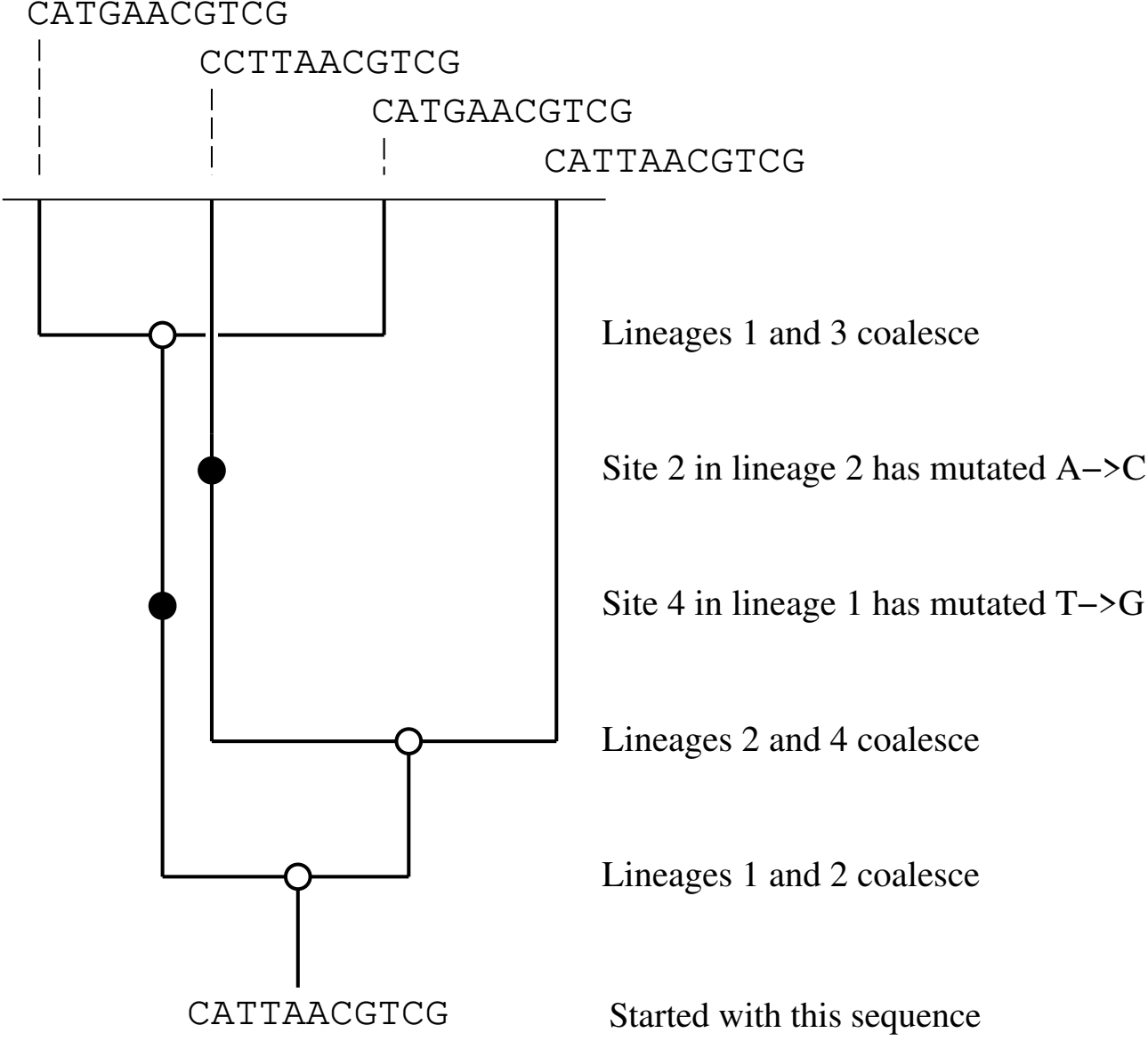
CATGAACGTCG
CCTTAACGTCG
CATGAACGTCG
CATTAACGTCG
Lineages 1 and 3 coalesce
Site 2 in lineage 2 has mutated A–>C
Site 4 in lineage 1 has mutated T–>G
Lineages 2 and 4 coalesce
Lineages 1 and 2 coalesce
CATTAACGTCG
Started with this sequence